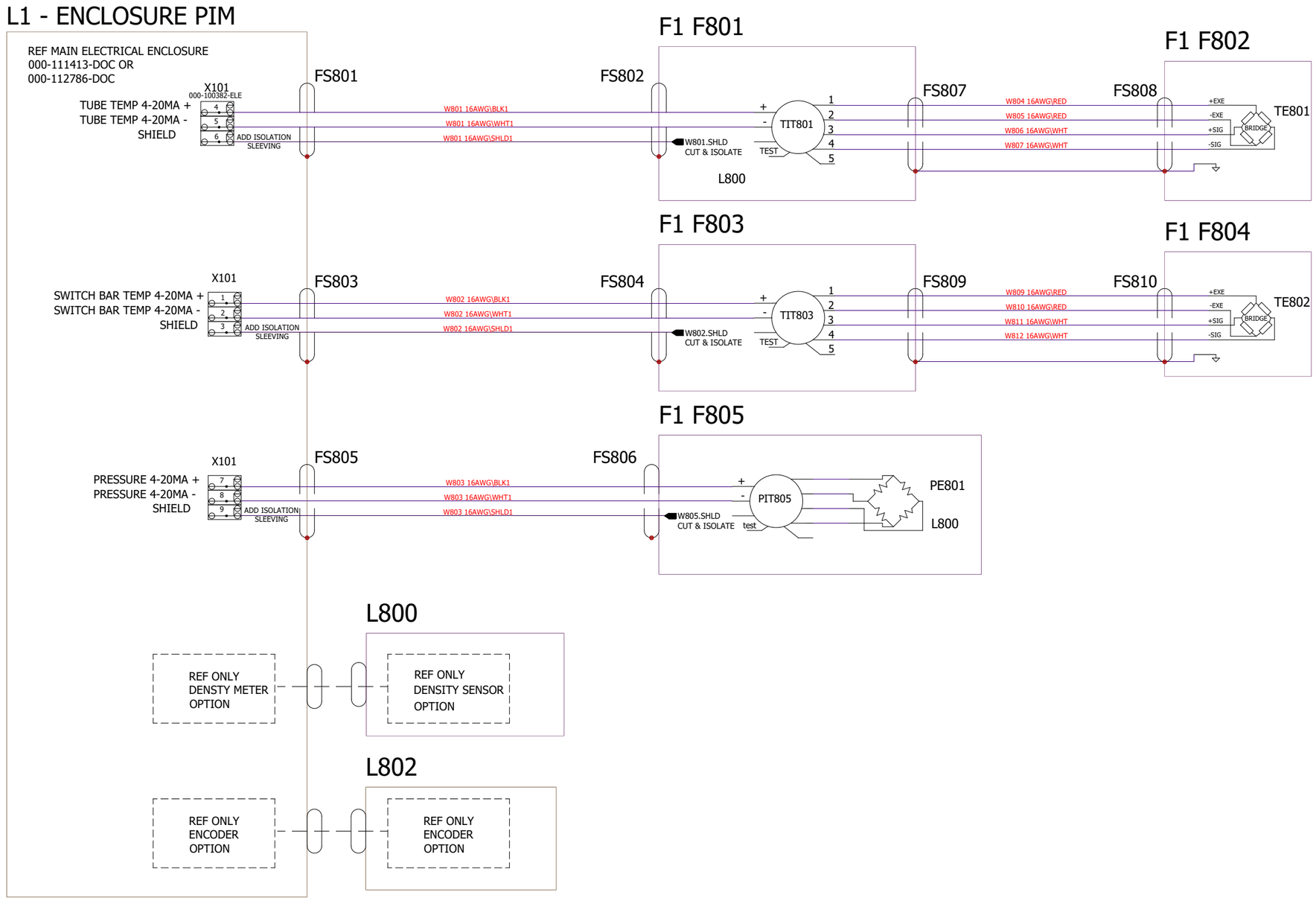

REFERENCE DESIGNATORS:
FS-FITTING SET (ENCLOSURE ENTRY)
K-RELAYS(ALL-OPTO)
PS-POWER SUPPLIES
P-CONNECTOR PLUG (SOC)
J-CONNECTOR JACK (PIN)
F-FUSE
CB-CIRCUIT BREAKER
M-MOTOR/CLUTCH
L-ENCLOSURE
R-RESISTOR
D-DIODE
S-SWITCH
X-TERMINAL BLOCKS

NOTES:
1) ALL SCREW TERMINAL CONNECTIONS SHALL HAVE CRIMP FERRULES.
2) ALL PUSH IN TERMINAL CONNECTIONS SHALL BE TINED WITH SOLDER
3) ALL TWIST-ON CONNECTIONS TO BE SOLDERED TOGETHER
4) WIRE LABELS TO BE INSTALLED AT THE ENDS OF EACH WIRE WITH TARGET PIN, WIRE NUMBER AND BASIC FUNCTION. EXAMPLE: (J21.2 W20 LAUNCH). WIRE LABELS TO BE READABLE FROM LEFT TO RIGHT IN THE HORIZONTAL AXIS AND TOP TO BOTOM IN ALL OTHER AXIS.
5) ALL WIRE(S) ENTERING ENCLOSURES SHALL BE PROTECTED WITH HEAT SHRINK WHERE CONTACT WITH SHARP EDGES EXIST.
6) WIRE WRAPS SHALL BE STAINLESS.
7) FSx FITTING SETS AND FCx CABLE DETERMINED BY BILL OF MATERIALS.
8) HAZARDOUS AREA RATING DETERMINED BY PROVER MODEL NUMBER

NOTIFIED BODY APPROVED DOCUMENT
CSA244391 CLASS 1, DIVISION 1
ATEX Ex d mb [ia] IIB T3 Gb
IECEx Ex d mb [ia] IIB T3 Gb
NO CHANGES ALLOWED TO THIS DOCUMENT WITHOUT APPROVAL OF NOTIFIED BODY OR CERTIFICATION AGENCY

FLOW MANAGEMENT DEVICES
Flow Management Devices, LLC
5225 S 37th St, Suite 4
Phoenix, Az 85040
602-233-9885

DOC-SYSTEM-WIRING-SENSORS-STD

	NAME	DATE		
DRAWN	Rob.Kalis	9/13/2017	TITLE:	SYSTEM-WIRING-SENSORS-STD
LAST REVISED	TIM M.	04/16/2020	P/N:	000-111418-DOC
CHECKED			MODEL#:	
SO#:			SHEET 01 OF 01	REVISION E